SIMPLY STAINLESS

Modular Sinks, Tables & Shelving

32-DPK-7-1500

*BENCH NOT INCLUDED.'
*600-1500 HAVE 2 DOORS.

32-DPK-7-1800

*BENCH NOT INCLUDED.
*1800-2400 HAVE 4 DOORS

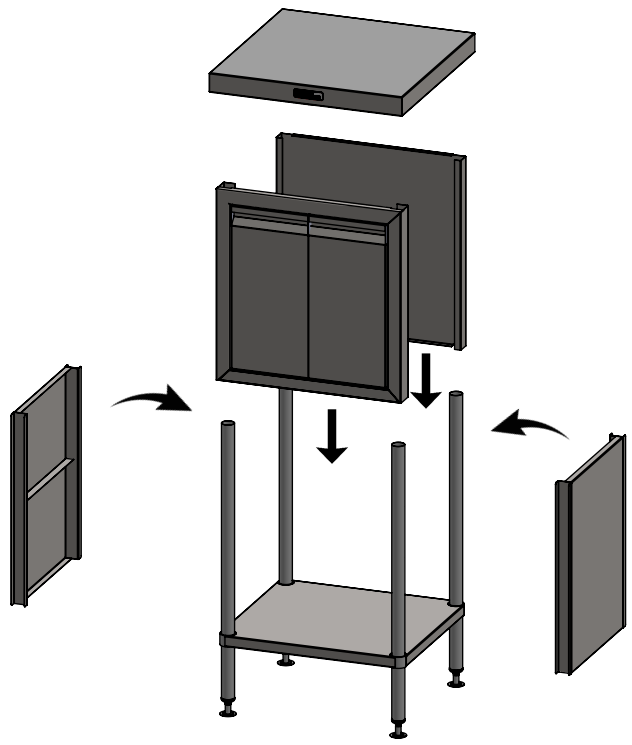

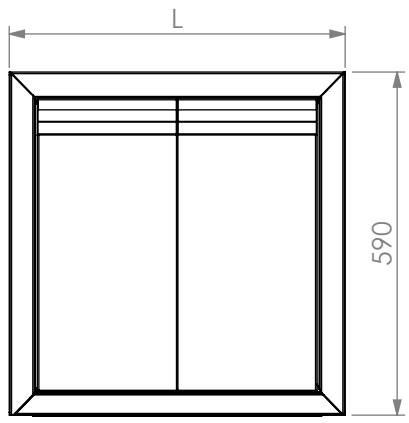

SPECIFICATION	
Panels	- High quality stainless steel. - 1.2mm gauge, no. 4 Finnish. - Double skinned doors - Full length piano hinge.

	Door Panel Kit			
	Product Code	**L (mm)**	**Fitment information**	**Unit weight (Kg)**
32-DPK	32-DPK-0600	575	To suit 01.02.03.05 & 06	14
	32-DPK-0900	815	To suit 01.02.03.05 & 06	18.6
	32-DPK-1200	1115	To suit 01.02.03.05 & 06	24.35
	32-DPK-1500	1415	To suit 01.02.03.05 & 06	30.4
	32-DPK-1800	1715	To suit 01.02.03.05 & 06	38.36
	32-DPK-1800C	1715	To suit 05-1800C	38.36
	32-DPK-2100	2015	To suit 01.02.03.05 & 06	44.3
	32-DPK-2100C	2015	To suit 05-2100C	44.88
	32-DPK-2400	2315	To suit 01.02.03.05 & 06	44.88
	32-DPK-6-EP		To suit DPK 600 SERIES	8.66
	32-DPK-7-EP		To suit DPK 700 SERIES	10.06

100% RECYCLABLE STAINLESS STEEL